Planning Permit No. C/PP/72/A/B/96

APPROVED
SUBJECT TO THE CONDITIONS IN THIS OFFICE LETTER.
No. C4/4710/96 Date. 2-7-96
FOR MEMBER SECRETARY
MADRAS METROPOLITAN DEVELOPMENT AUTHORITY
MADRAS-600 008.

Scrutiny plan
31/5/96

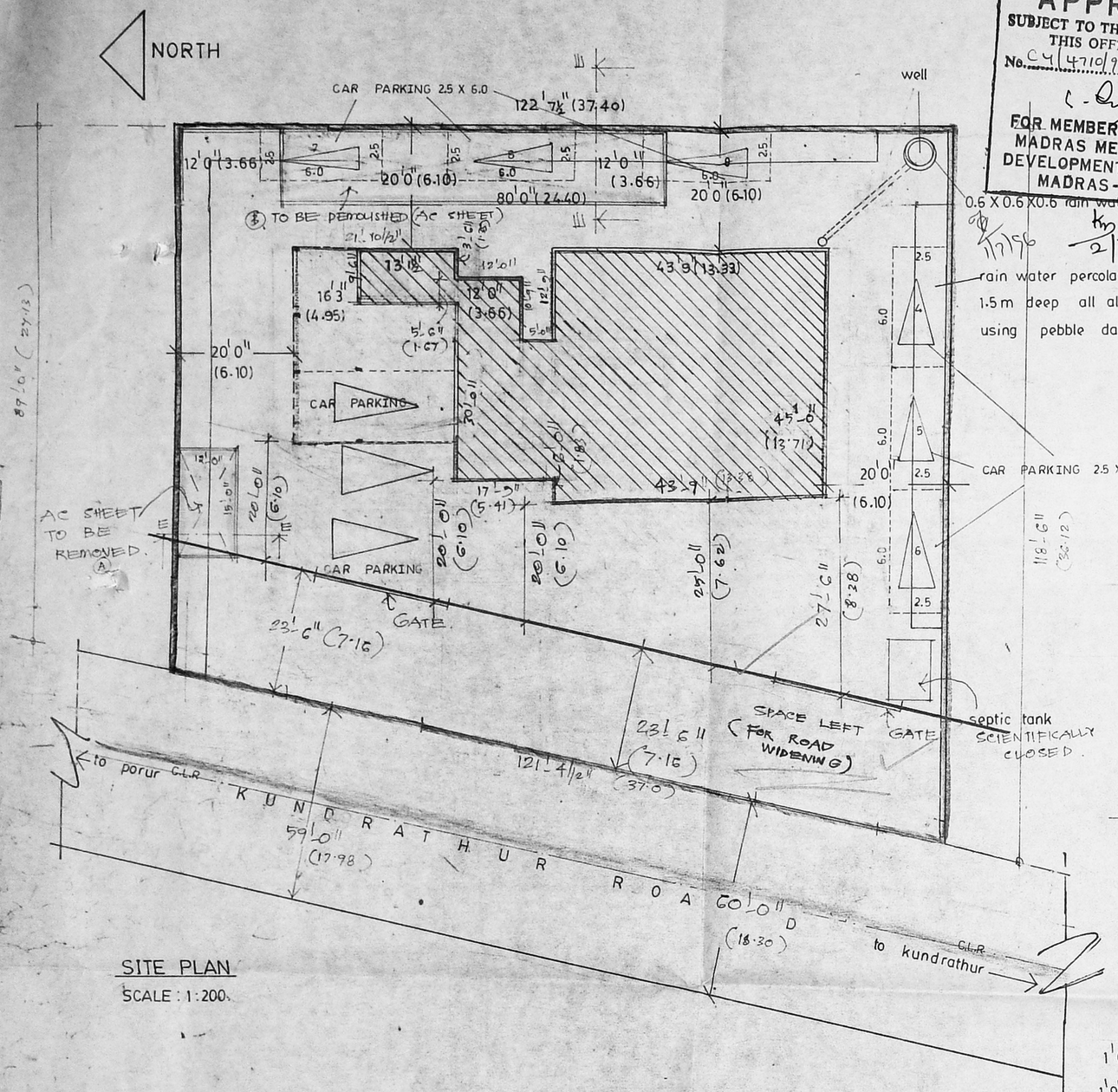

SITE PLAN
SCALE : 1:200.

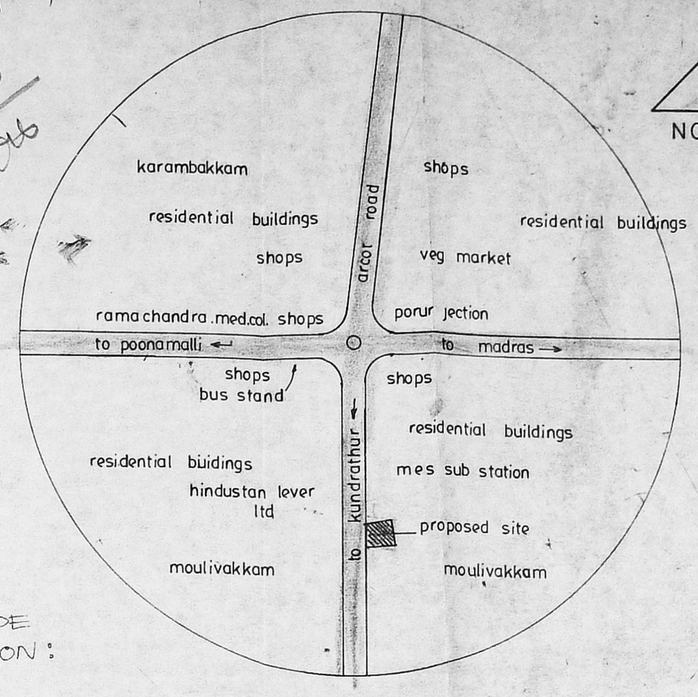

KEY PLAN
(NOT TO SCALE)

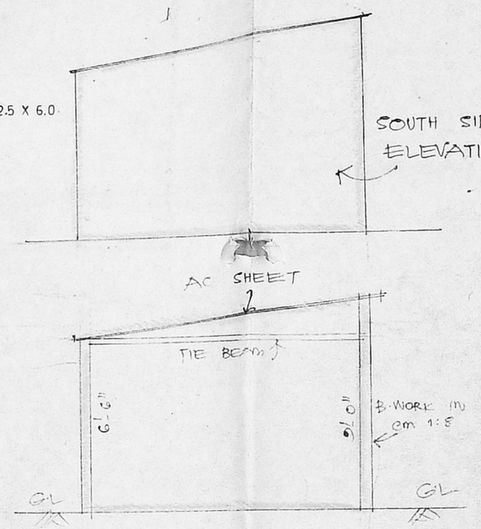

C/S OF AC SHEET ROOF (TO BE DEMOLISHED)
SEC-EE (A) and (B)

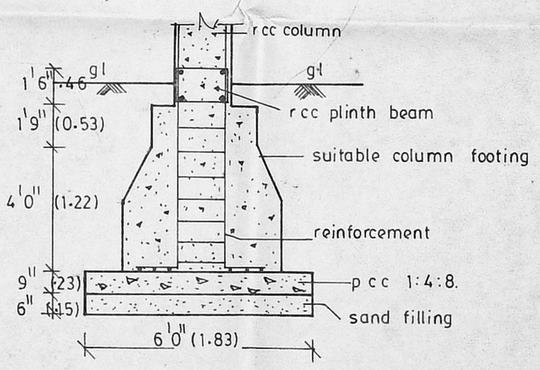

TYP FOUNDATION DETAILS

AREA CALCULATION	12722 SQ.FT (1181.90) AS ON SITE	
TOTAL EXTENT OF LAND	: 13068 sft ; 1214.50 sqm	AS PER (PATTA)
GROUND FLOOR AREA	2650 sft ; 246.18 sqm	
FIRST FLOOR AREA	2650 sft ; 246.18 sqm	
TOTAL	5300 sft ; 492.37 sqm	
DEMOLISHED AREA	: 960 sft ; 89.28 sqm	
	COVERAGE : 20%	
	FSI : 0.40	

BOUNDARY
PROPOSAL'S
ROAD
DEMOLISHED

THE DRAWING SHOWING THE DETAILS OF KEY PLAN, SITE PLAN, WELL, SEPTIC TANK, PERCOLATION PIT & TYPICAL FOUNDATION AT S.NO:347 PART OF PORUR VILLAGE, SAIDAPET TALUK, CHENGAI M.G.R DISTRICT.

SCALE : 1:100 1:25

DRG NO: MCCB/MM/9510 JULY 593.
SHEET NO: 2

M. LOTTA ALLIANCE
applicant

Er. K. VENUGOPAL Rtd. A.E.E.
Corporation of Madras.
Civil & Sanitary Engineer Consultant
Licensed Surveyor Class I No. 320.
Licensed Plumber Class I No. 3 Water
Sewerage No. . . . Water Supply No. . . . .
3 Neelakandan St., Nungambakkam (Near Pa...)
Madras-34. licensed surveyor

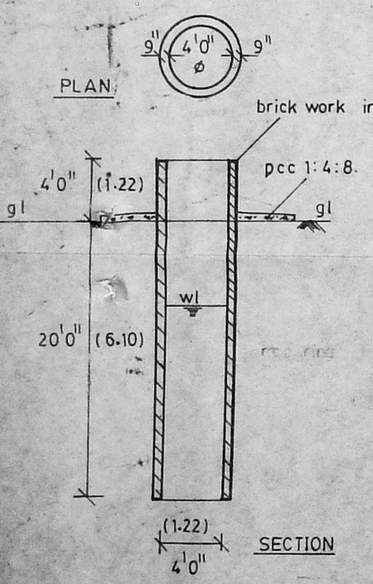

WELL DETAILS

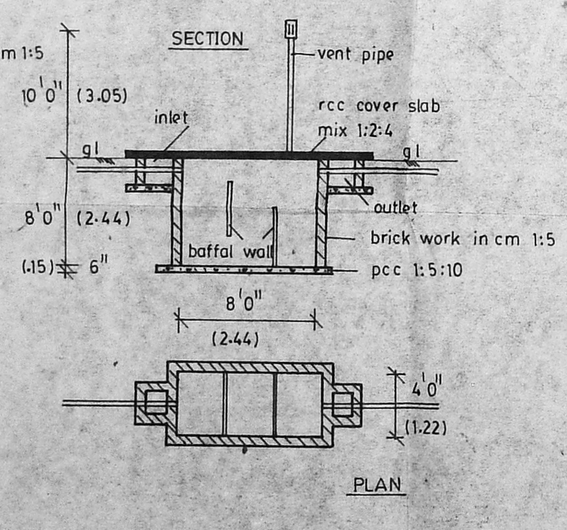

SEPTIC TANK DETAILS

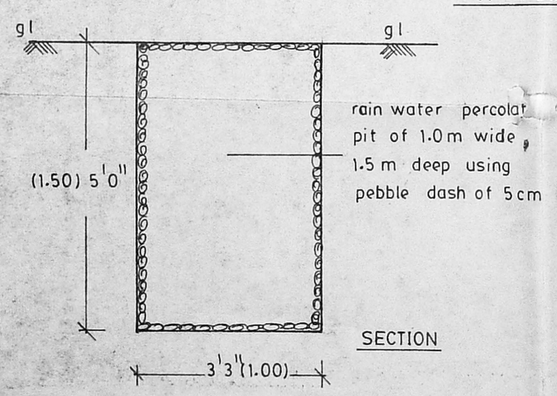

PERCOLATION PIT DETAILS